tikamoon

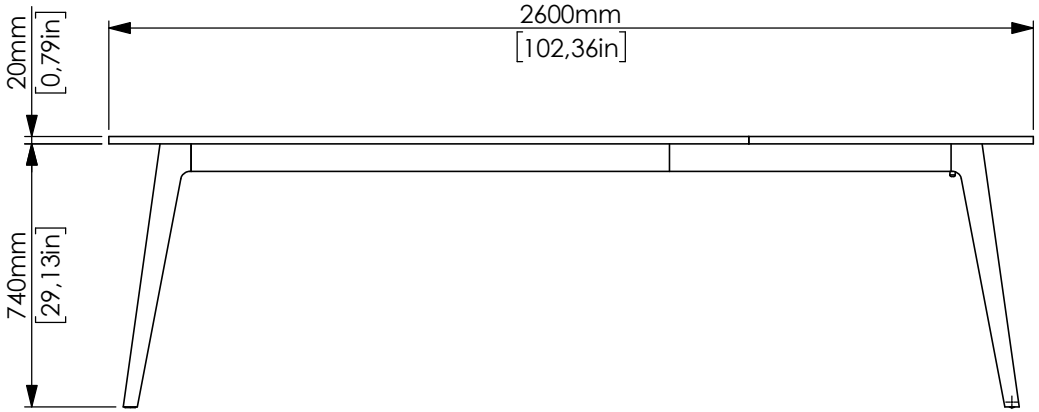

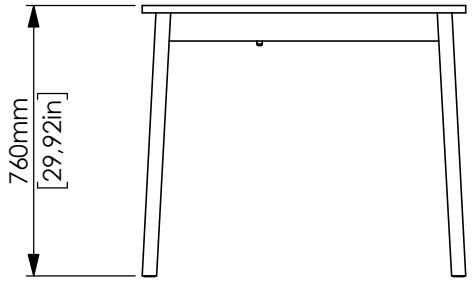

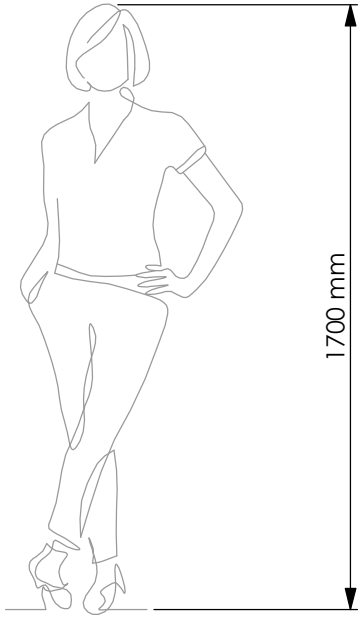

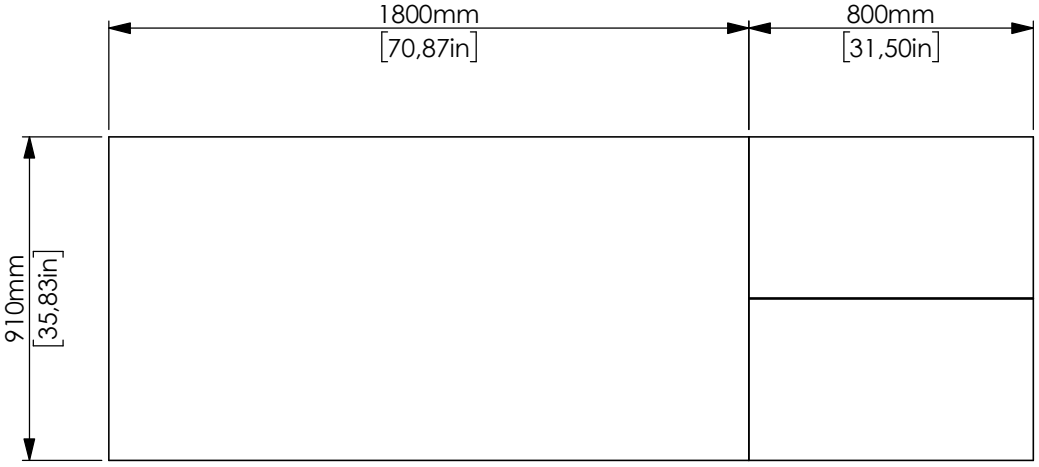

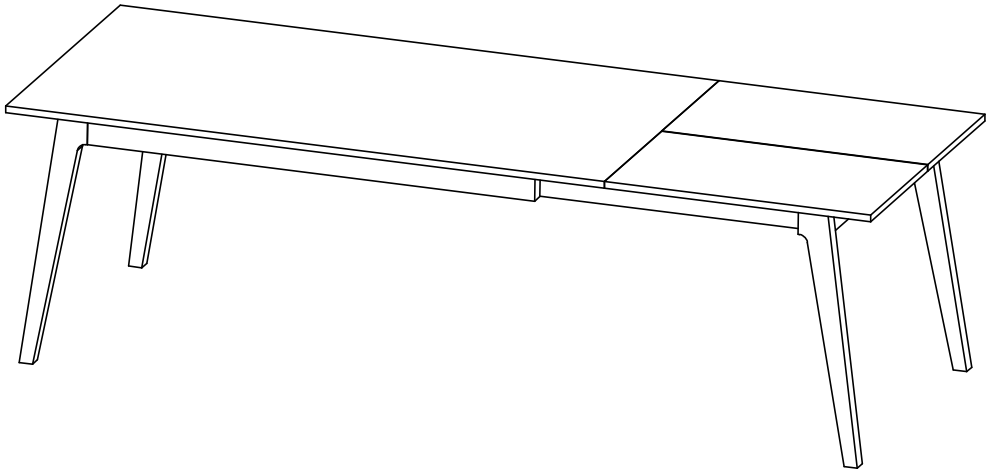

DIN0079



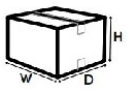

W x D x H (mm)	W x D x H (in.)
1930 x 240 x 1090	75.98 x 9.44 x 42.91